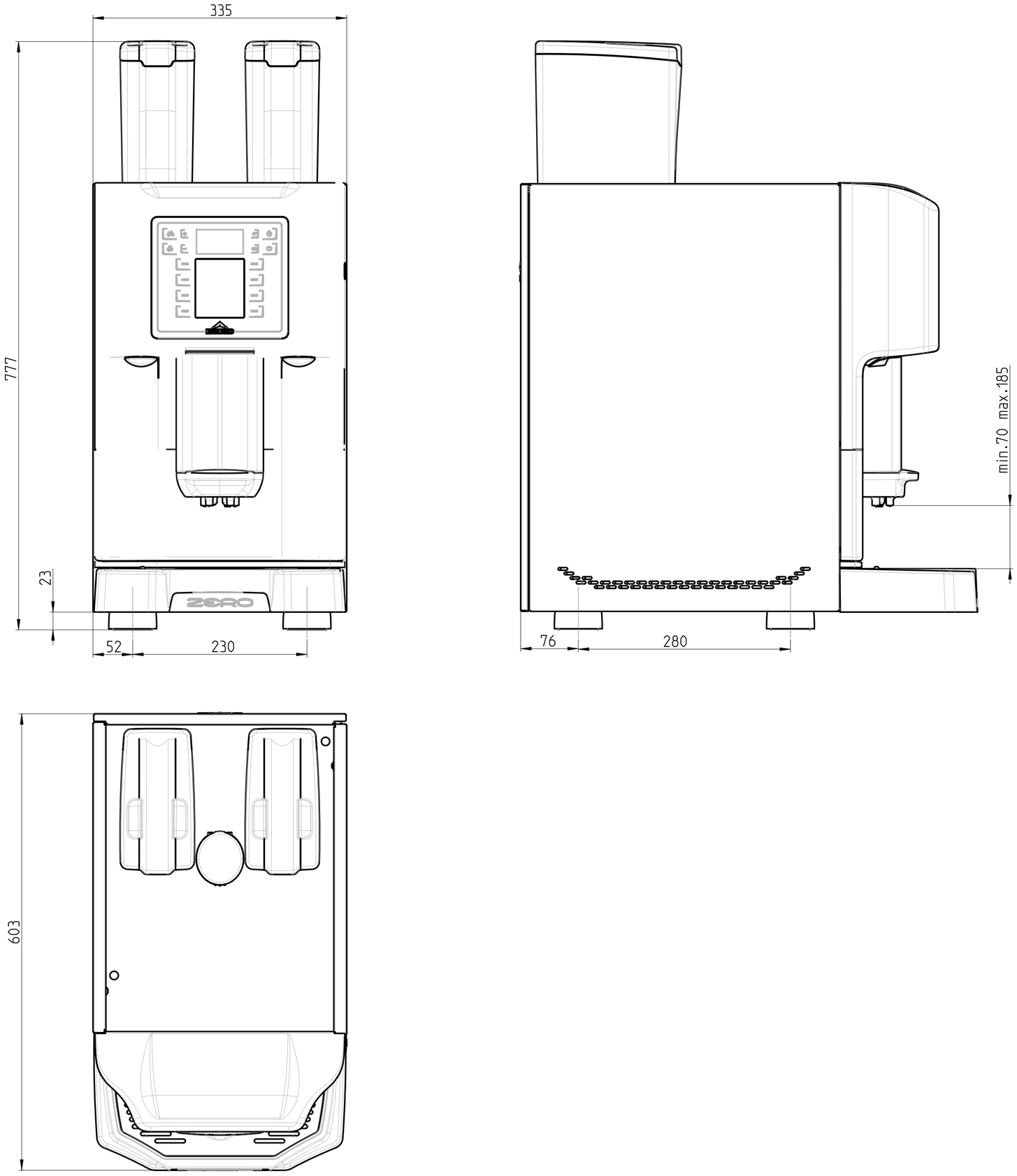

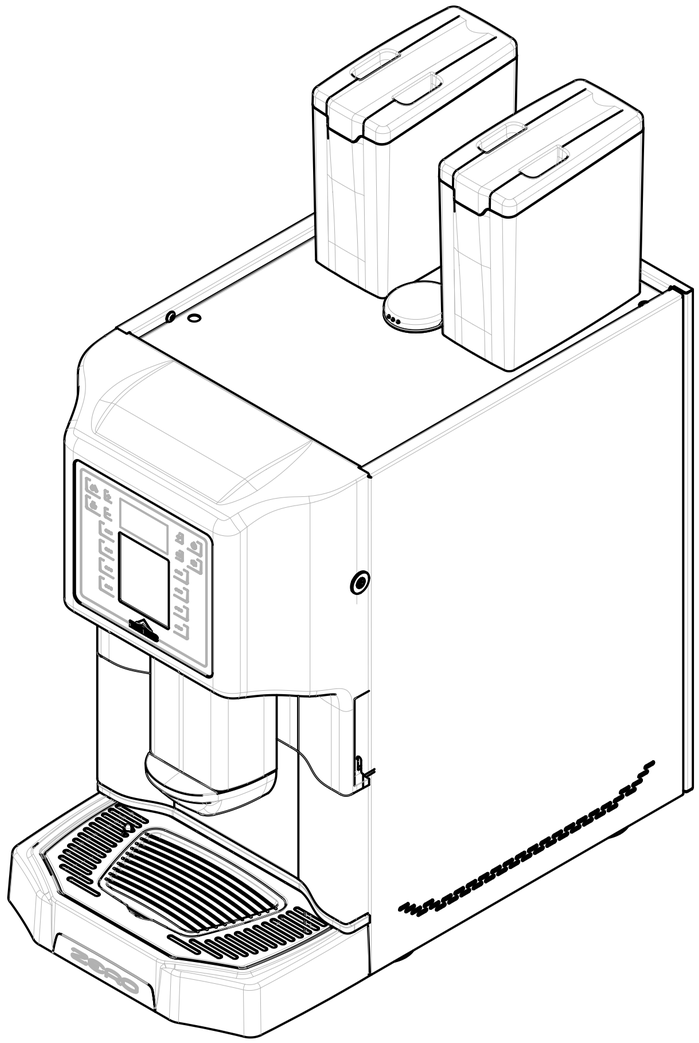

REV	CHANGE DESCRIPTION	DATE	DRAFTER	CTI

MODIFICATIONS

THIS DOCUMENT IS IN ACCORDANCE TO :
- ISO 2768 mK

METRIC
DIMENSIONS SHOWN IN MM

Rancilio Group spa
Viale della Repubblica 40 20010 Villastanza di Parabiago -MI- Italia Tel +39 0331 408200 - Fax +39 0331 551437
www.rancilio.com
www.egrocoffee.com

All proprietary rights reserved by Rancilio Group S.p.A. This drawing shall not be reproduced, or in any way utilized, for the manufacture of the component or unit herein illustrated and must not be released to other parties, without written consent. Any infringement will be legally pursued

DRAFTER P.B.	CHECKER C.M.	MATERIAL	
CTI	DATE 10/03/2017	TREATMENT	
PROJECT PD	LAST ISSUE DATE 19.05.2017	SURF FINISH	
DWG NUMBER PD_0016		DRAWING NAME ZERO PURE COFFEE	
DWG STATUS Development		REV --	SCALE 1:4 / SIZE A2 / SHEET 1 of 1

CAD DRAWING. HANDLING ON CAD SISTEM ONLY