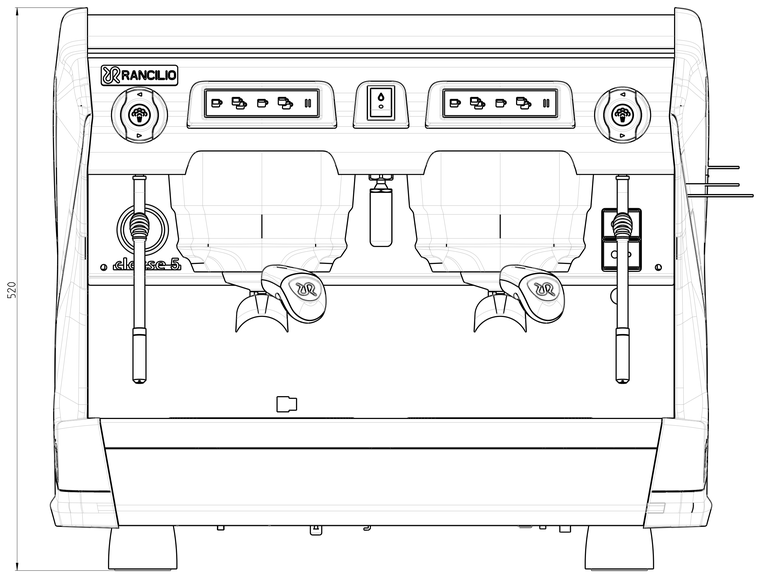

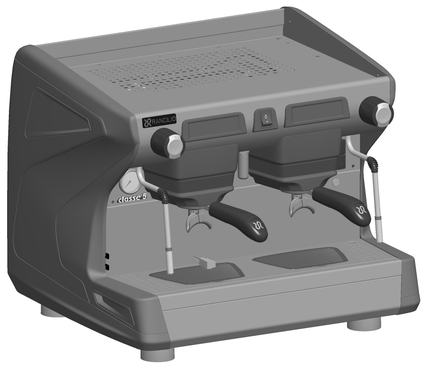

RANCILIO GROUP PRODUCT
ENGINEERING DESIGN AREA

REV	CHANGE DESCRIPTION	DATE	DRAFTER	CTI

MODIFICATIONS

THIS DOCUMENT IS IN ACCORDANCE TO : - ISO 2768 mK

METRIC DIMENSIONS SHOWN IN MM

Rancilio Group spa
Strada Statale Regionale 40 20010 Villanuova s/n Parabiago
MI - Italia Tel +39 0331-4862000 - Fax +39 0331-3501437
www.rancilio.com
www.egrocoffee.com

DRAFTER S.C.	CHECKER C.C.	MATERIAL	
CTI	DATE	HEAT TREATMENT	
PROJECT	LAST ISSUE DATE	SURF FINISH	
DWG NUMBER MACCHINA_2GR_E_COMP		DRAWING NAME CLASSE 5 2 Gr. COMPATTA	
DWG STATUS Sviluppo		REV --	SCALE 1:2 / SIZE A0 / SHEET 1 of 2

CAD DRAWING, HANDLING ON CAD SYSTEM ONLY

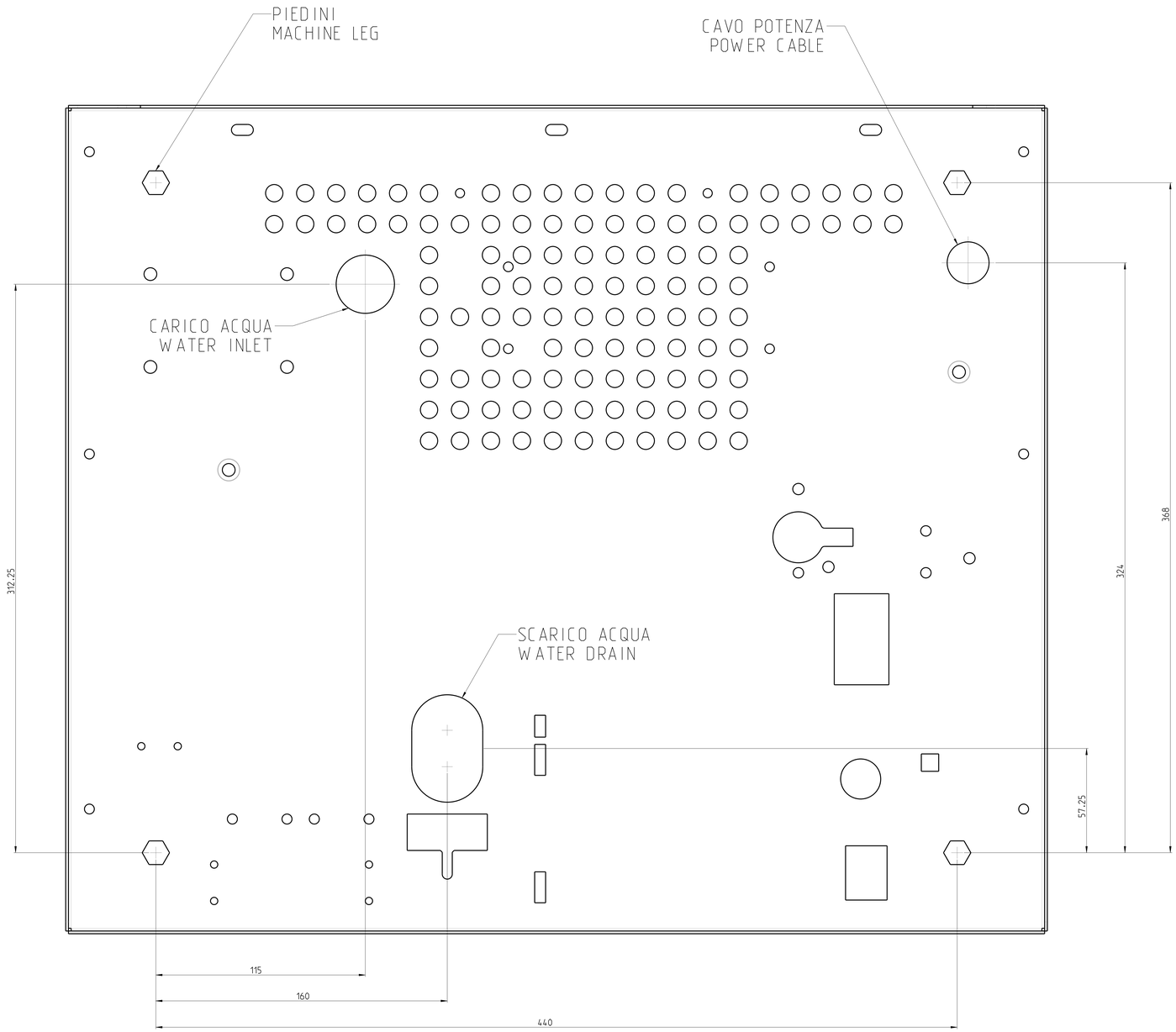

RANCILIO GROUP PRODUCT
ENGINEERING DESIGN AREA

REV	MODIFICATIONS	DATE	DRAFTER	CHK

THIS DOCUMENT IS IN ACCORDANCE TO : - ISO 2768 mK

METRIC DIMENSIONS SHOWN IN MM

Rancilio Group spa

Viale della Rimembranza di Lesmo 67/69 - 20900 Monza (MB) - Italia
Tel. +39 039 9287-200 - Fax +39 039 9287-300

www.rancilio.com
www.egrocoffee.com

All information contained in this drawing is the property of Rancilio Group S.p.A. This drawing is not to be copied, in whole or in part, nor shall its contents, nor the existence of the contents of this drawing, be disclosed to third parties without the express written authorization of the Rancilio Group.

DRAFTER S.C.	CHECKER C.C.	MATERIAL	
DATE		HEAT TREATMENT	
PROJECT	LAST ISSUE DATE	SURF FINISH	
DWG NUMBER		DRAWING NAME	CLASSE 5 2 Gr. COMPATTA
DWG STATUS Sviluppo		REV --	SCALE 1:1 / SIZE A0 / SHEET 2 of 2

CAD FILE: 1.MAIN.CAD